SFB Series
Single Filter Housings
Big Blue®Type

neo•PURE™

Commercial/Industrial
Filtration Applications

Standard Features

- Manufactured in China
- Designed for commercial or industrial filter applications
- Heavy-duty 304L stainless steel construction for maximum durability and corrosion resistance
- Specifically designed for high temperature and high pressure applications
- Uses 4-1/2" diameter (Big Blue® style) double open-end (DOE) cartridges
- Ring nut closure for quick cartridge change-outs
- Spring-loaded knife-edge seals provides positive sealing for variable length cartridges
- Includes mounting bracket kit for easy installation

Product Specifications

Maximum Operating Pressure

150 psig (10.3 bar) @ 200°F (93°C)

Connections

Inlet/Outlet: 1" FNPT

Drain Port: Quick-twist fitting

Materials of Construction

Head/Shell/Connections: 304L stainless steel

Gaskets

Standard: Buna N (FDA grade)

Optional: EPR, Viton

Finish

Poly-coat on exterior surfaces

Applications

- Potable Water
- Food and Beverage
- Electronics
- Coolants
- Wastewater
- Paints/Inks/Coatings
- Photographic Solutions
- Chemicals
- Plating Solutions
- Desalination Prefiltration

MODEL	QUANTITY (LENGTH) OF CARTRIDGES	MAXIMUM FLOW RATE* GPM (LPM)	MAXIMUM DIAMETER CARTRIDGE	DRAIN SIZE	DIMENSIONS A
SFB1	1 (10")	12.5 (47.3)	4-1/2"	1/8"	15" (38.1 cm)
SFB2	1 (20")	25 (94.6)	4-1/2"	1/8"	25" (63.5 cm)

* *Based upon 12.5 gpm (47.3 lpm) per 10" cartridge length with a 25 micron wound cartridge at 2 PSID clean and viscosity of 1 cps. Flow rates are approximate. Actual flow rates are based upon fluid, viscosity, cartridge type, micron ratings and other factors.*

Dimensions

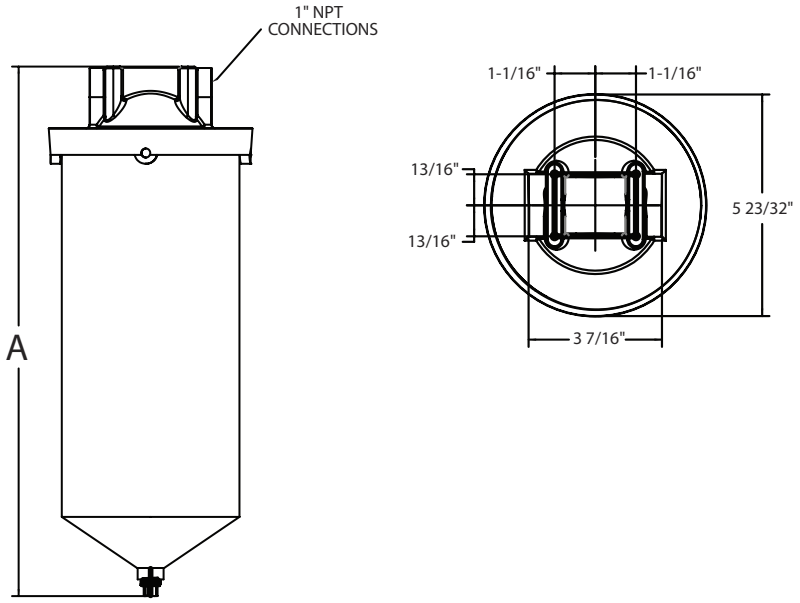

Ordering Guide (Example: SFB2-E)

SFB	2	–		E
MODEL	**CARTRIDGE LENGTH**	**MATERIAL**	**CONNECTION**	**GASKET**
SFB	1 = 10", 9-7/8", 9-3/4" 2 = 20"	Blank = 304L (standard)	Blank = 1" FNPT (standard)	Blank = Buna N (standard) E = EPR V = Viton

CartridgeOptions

Available in 9-3/4", 20" and 30" Lengths

Meltblown Sediment Cartridges

For more information, see MB Series Brochure

String Wound Cartridges

For more information, see WPP Series Brochure

Pleated Filter Cartridges

NeoLogic SOLUTIONS Filtration Division

9450 SW Gemini Dr, ECM #83358, Beaverton, OR 97008
Tel 855.896.3525 • Fax 866.409.9622
www.neologicsolutions.com•info@neologicsolutions.com
STUART, FL • BEAVERTON, OR • GREENVILLE, SC • SAN DIEGO, CA

QUESTIONS?
AskoneofourServiceRepresentatives:
Mon-Fri 8a-8p, Sat 8:30a-4:30p EST

We ship six daysaweek!
FedEx

© Copyright 2014 NeoLogic Solutions. All Rights Reserved. Manufacturer reserves the right to make changes without notice.