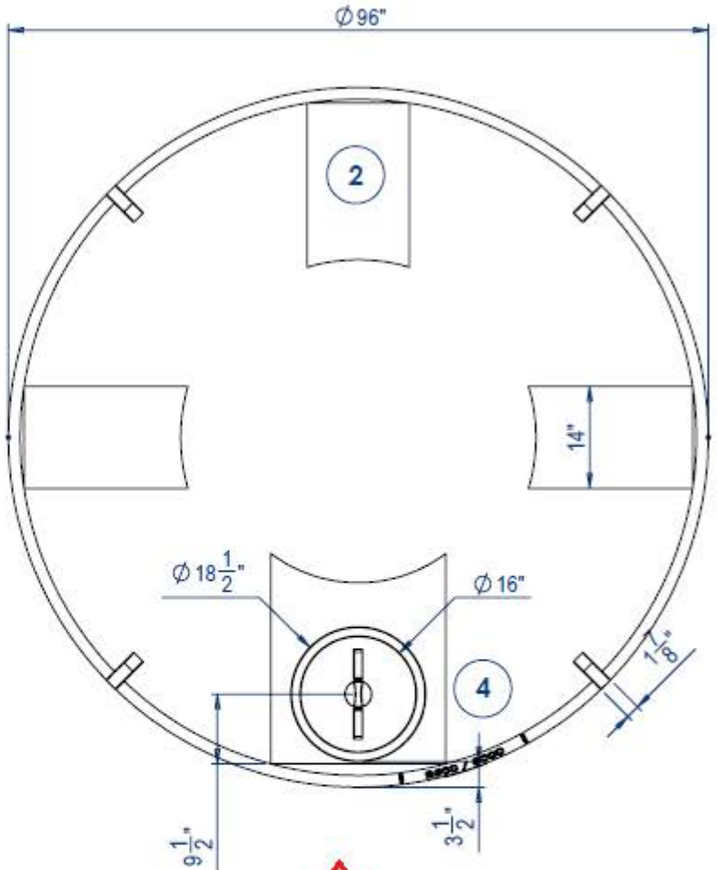

0°

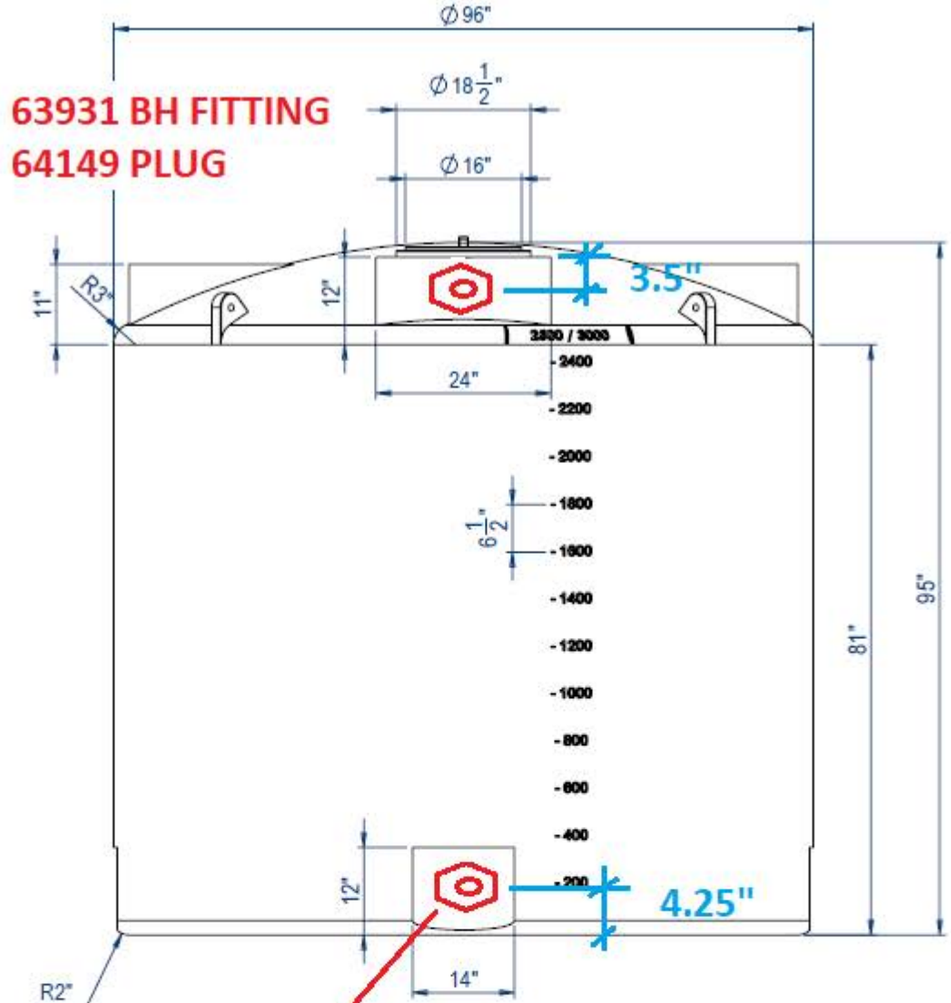

NOTES:

1. Bottom Layout Flat (4) - 12" x 14"
2. Top Layout Flat (3) - 11" x 14"
3. Dome Flat (1) - 12" x 24"
4. Manway - 16"
5. Flush Gallon Markers

PROPRIETARY AND CONFIDENTIAL
THE INFORMATION CONTAINED IN THIS DRAWING IS THE SOLE PROPERTY OF POLY-MART, INC, 16310 BRATTON LANE #210, AUSTIN TX 78728. ANY REPRODUCTION IN PART OR AS A WHOLE WITHOUT THE WRITTEN PERMISSION OF POLY-MART, INC, 16310 BRATTON LANE #210, AUSTIN TX 78728 IS PROHIBITED.

UNLESS OTHERWISE SPECIFIED:
DIMENSIONS ARE IN INCHES
TOLERANCES:
FRACTIONAL ±
ANGULAR: MACH ± BEND ±
TWO PLACE DECIMAL ±
THREE PLACE DECIMAL ±
INTERPRET GEOMETRIC TOLERANCING PER:
MATERIAL HDPE
FINISH
DO NOT SCALE DRAWING

	NAME	DATE
DRAWN	GM	8/15/2018
CHECKED		
ENG APPR.		
MFG APPR.		
Q.A.		

CAD DESIGN BY -
CADWorksPro
Chicago, IL
gilm@cadworkspro.com

NORWESCO
NORWESCO. INC. SAINT BONIFACIUS. MN

2500 Gallon
Poly-Mart Water Only

SIZE	Part Number	REV
B	2500 Water Only	

SCALE: 1:20 SHEET 1 OF 1