WATERSTONE FAUCETS

26790 Madison Ave.
Murrieta, CA 92562
888-304-0660

www.waterstoneco.com

ITEM NO: 3300

STYLE: TRADITIONAL

INTENDED USE: POTFILLER - Deck mount

CUSTOMER NAME:

JOB NO:

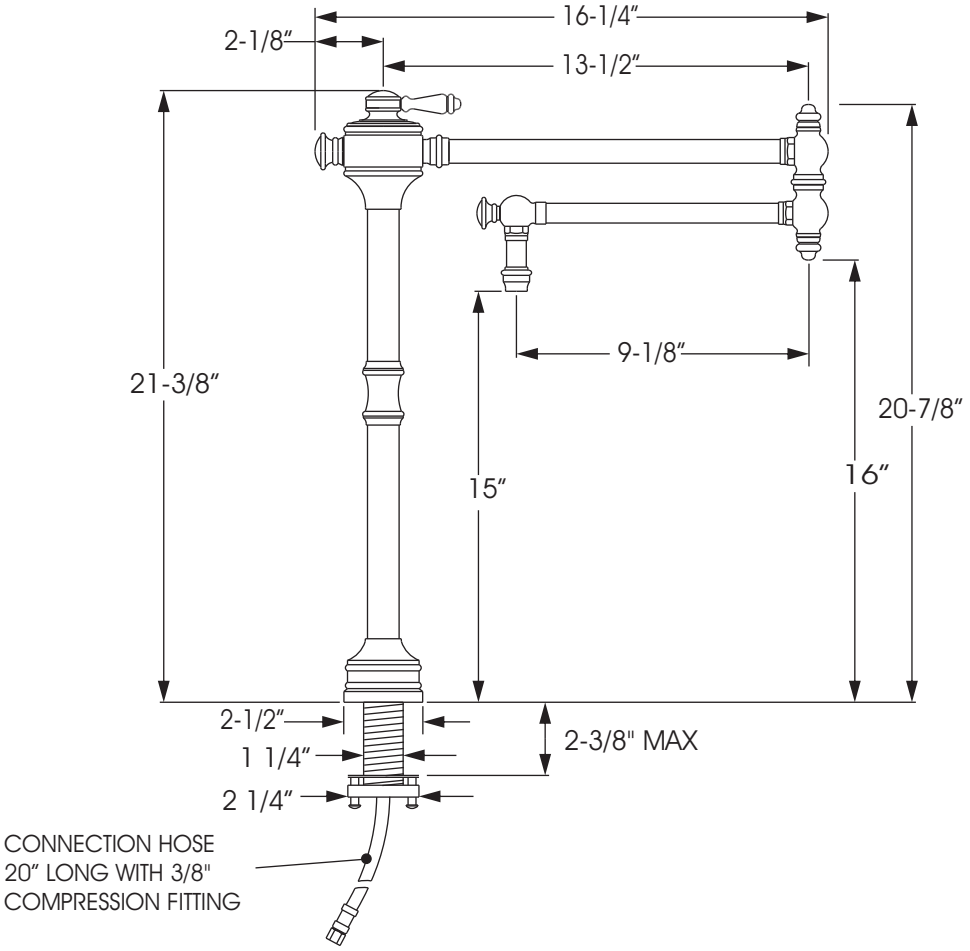


RECOMMENDED HOLE SIZE 1-3/8"

Technical Specifications:

- Solid brass construction.
- 1/4 turn ceramic disk valve cartridge.
- Lever handle.
- Two handle caps included: Finish match and decorative ceramic.
- 2.2 gpm maximum flow rate.
- Check valve to prevent water run-out.
- Aerated stream.
- 22" Reach.

## Codes/Standards Applicable

Specified model meets or exceeds the following:

- ASME A112.18.1
- CSA B125.1
- NSF 61
- ADA

DATE: 1-9-09

***Made in the U.S.A.***

DIMENSIONS MAY VARY AND ARE SUBJECT TO CHANGE. NO RESPONSIBILITY IS ASSUMED FOR USE OF SUPERCEDED OR VOIDED DATA.